JACK 杰克

快 速 服 务 100%

# 零件手册
# Parts Manual

## A2系列 A2Series

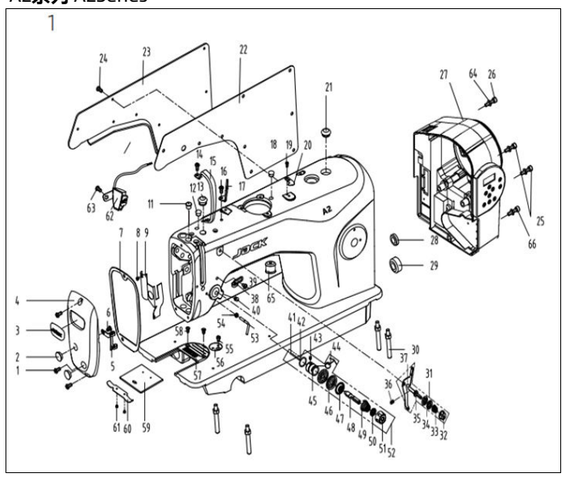

### 1. 机壳、外装分组件/Machine Frame & Miscellaneous Cover Components

| 序号NO. | 公司件号 Part NO. | 名称 PartName | 零件描述 Description | 数量 | Number |
|---|---|---|---|---|---|
| 1 | 101S11001 | 后面板螺钉 SM3/16*x28 L=9 | Screw SM3/16*x28 L=9 | 3 | 3 |
| 2 | 10122003 | 面板调节孔塞 | Rubber plug | 2 | 2 |
| 3 | 13837002 | 商标牌 | Head card | 1 | 1 |
| 4 | 302893 | 面板（喷漆） | Face plate asm | 1 | 1 |
| 5 | 13813005 | 左线钩 | Thread guide left | 1 | 1 |
| 6 | 101S11007 | 右线钩螺钉 SM11/64*x40 L=6 | Screw SM11/64*x40 L=6 | 1 | 1 |
| 7 | 10122114 | 面板垫 | Face plate gasket | 1 | 1 |
| 8 | 101S11027 | 防油板螺钉 SM1/8*x44 L=3.4 | Screw SM1/8*x44 L=3.4 | 1 | 1 |
| 9 | 10412007 | 面部油 油板 | Face oil shield asm. | 1 | |
| | 1141208Z | 面部油 油板（厚料） | Face oil shield asm.(H) | | 1 |
| 11 | 10122013 | 针杆上衬套孔塞 | Rubber plug | 1 | 1 |
| 12 | 10122005 | 挑线连杆销螺孔塞 | Rubber plug | 1 | 1 |
| 13 | 10122004 | 针杆曲柄螺孔塞 | Rubber plug | 1 | 1 |
| 14 | 101S11004 | 挑线杆护罩螺钉 SM3/16*x28 L=7 | Screw SM3/16*x28 L=7 | 1 | 1 |
| 15 | 13812018 | 挑线杆防护罩 | Thread take-up lever cover | 1 | 1 |
| 16 | 101S11004 | 挑线杆护罩螺钉 SM3/16*x28 L=7 | Screw SM3/16*x28 L=7 | 1 | 1 |
| 17 | 13512004 | 三孔线勾 | 3-hole thread guide | 1 | 1 |
| 18 | 10122005 | 挑线连杆销螺孔塞 | Rubber plug | 1 | 1 |
| 19 | 114S11015 | 剖线刀螺钉 SM9/64*x40 L=6 | Screw SM9/64*x40 L=6 | 2 | 2 |
| 20 | 11419001 | 剖线刀 | Knife | 1 | 1 |
| 21 | 20122002 | 油塞 | Rubber plug | 1 | 1 |
| 22 | 10122113 | 后面板垫 | Side plate gasket | 1 | 1 |
| 23 | 302892 | 后面板（喷漆） | Side plate | 1 | 1 |
| 24 | 101S11001 | 后面板螺钉 SM3/16*x28 L=9 | Screw SM3/16*x28 L=9 | 11 | 11 |
| 25 | 114S30001 | 螺栓(内六角) | Screw M5×25 | 2 | 2 |
| 26 | 114S13001 | 直泵电机螺钉 M5x20 | Screw M5×20 | 2 | 2 |
| 27 | 10133048 | A2一体电控（琦星） | Electronic control box(Q) | 1 | 1 |
| | 10133004 | A2一体电控（赖克克斯） | Electronic control box | 1 | 1 |
| 28 | 10122006 | 送料调节器孔塞 | Rubber plug | 1 | 1 |
| 29 | 10122007 | 下轴工艺孔塞 | Rubber plug | 1 | 1 |
| 30 | 101S12001 | 底板支柱 | Machine head stud | 2 | 2 |
| 31 | 1381300400 | 小夹线器组件 | Thread tension asm. | 1 | 1 |
| 32 | 138S16019 | 小夹线器螺母 | Thread tension nut | 1 | 1 |
| 33 | 11227001 | 小夹线弹簧 | Thread tension spring | 1 | 1 |
| 34 | 11212004 | 小夹线板 | Thread tension disk | 2 | 2 |
| 35 | 13810008 | 小夹线器螺柱 | Thread tension post | 1 | 1 |
| 36 | 138S08006 | 小夹线器固定螺钉 SM3/16*x28 L=7 | Screw SM3/16*x28 L=7 | 1 | 1 |
| 37 | 13812066 | 过线板 | Thread tension guide plate | 1 | 1 |
| 38 | 10113004 | 右线钩 | Thread guide right | 1 | 1 |
| 39 | 101S11007 | 右线钩螺钉 SM11/64*x40 L=6 | Screw SM11/64*x40 L=6 | 1 | 1 |
| 40 | 101S15010 | 左销螺钉 SM15/64*x28 L=7 | Screw SM15/64*x28 L=7 | 1 | 1 |
| 41 | 11326012 | 松线钉 | Tension release pin | 1 | 1 |
| 42 | 10122014 | 挑线簧调节座O型圈 | Rubber ring | 1 | 1 |
| 43 | 101S15005 | 夹线紧固螺钉 SM9/64*x40 L=5.5 | Screw SM9/64*x40 L=5.5 | 1 | 1 |
| 44 | 10127001 | 挑线簧 | Thread take-up spring | | 1 |
| | 10127031 | 挑线簧（厚料） | Thread take-up spring(H) | | 1 |
| 45 | 10103011 | 挑线簧调节座 | Thread tension base | 1 | 1 |
| 46 | 10112005 | 夹线板 | Thread tension disk | 2 | 2 |
| 47 | 10112006 | 松线板 | Disk stopper | 1 | 1 |
| 48 | 138S16013 | 夹线螺钉 | Thread tension post | 1 | 1 |
| 49 | 10127002 | 夹线弹簧 | Thread tension spring A | 1 | |
| | 11427050 | 夹线弹簧（厚料） | Thread tension spring A (H) | | 1 |
| 50 | 10112007 | 夹线制动板 | Thread disk rotating stopper | 1 | 1 |
| 51 | 138S16013 | 夹线螺母 | Thread tension nut | 1 | 1 |
| 52 | 1013300800 | 夹线器组件 | Thread tension asm. | 1 | |
| | 1381300700 | 夹线器组件（厚） | Thread tension asm.(H) | | 1 |
| 53 | 11413011 | 回式过线钩 | Thread guide | 1 | 1 |
| 54 | 401S16001 | 螺母SM9/64*x40 | Nut SM9/64*x40 | 1 | 1 |
| 55 | 138S11002 | 卷边器座螺钉 SM11/64*x40 L=5.5 | Screw SM11/64*x40 L=5.5 | 1 | 1 |
| 56 | 13812019 | 卷边器座 | Ruler stop seat | 1 | 1 |
| 57 | 101S17002 | 针板螺钉(进口) SM11/64*x40 | Screw SM11/64*x40 | 2 | 2 |
| 58 | 11414006 | 针板 | Needle plate | 1 | |
| | 11315001 | 针板(厚料) | Needle plate(H) | | 1 |
| 59 | 10115002 | 推板 | Slide plate | 1 | 1 |
| 60 | 10127009 | 推板簧 | Slide plate spring | 1 | 1 |
| 61 | 101S11019 | 推板簧螺钉 SM3/32*x56 L=2 | Screw SM3/32*x56 L=2 | 2 | 2 |
| 62 | 1013001900 | LED灯开关组件 | LED asm | 1 | 1 |
| 63 | 101S11001 | 后面板螺钉 SM3/16*x28 L=9 | Screw SM3/16*x28 L=9 | 1 | 1 |
| 64 | W01009 | GB/T97.1-1985垫圈5 | Wsher5 | 1 | 1 |
| 65 | 10122120 | 橡皮塞（单孔） | Rubber plug | 1 | 1 |
| 66 | 114S30018 | 螺栓(内六角)M5×37 | Screw | 1 | 1 |

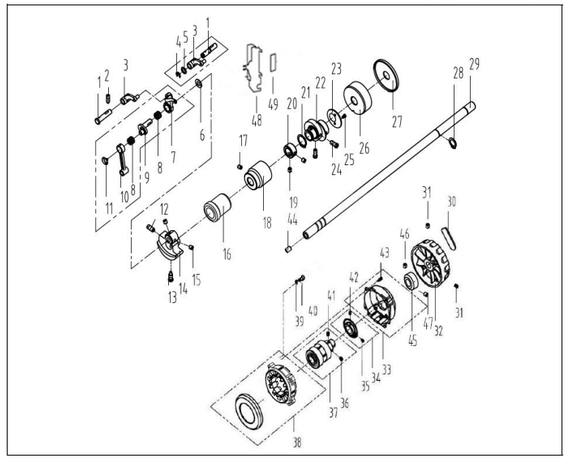

### 2. 上轴挑线分组件/Main Shaft & Thread Take-up Components

| 序号NO. | 公司件号 Part NO. | 名称 PartName | 零件描述 Description | 数量 | Number |
|---|---|---|---|---|---|
| 1 | 11326013 | 挑线连杆销 | Thread take-up connecting rod pin | 1 | |
| | 10126001 | 挑线连杆销（厚料） | Thread take-up connecting rod pin(H) | | 1 |
| 2 | 101S15001 | 上轴螺钉 SM15/64*x28 L=15 | Screw SM15/64*x28 L=15 | 1 | 1 |
| 3 | 10105001 | 挑线连杆（厚料） | Thread take-up connecting rod(H) | | 1 |
| | 11305010 | 挑线连杆 | Thread take-up connecting rod | 1 | |
| 4 | H05013 | GB/T896-1986挡圈 | Snap ring | 2 | 2 |
| 5 | 11328010 | 垫片 | washer | 1 | 1 |
| 6 | 10112003 | 针杆曲柄护板 | Needle bar crank protecting plate | 1 | 1 |
| 7 | 1013800100 | 挑线杆分组件 | Thread take-up lever asm. | 1 | |
| | 1133800200 | 挑线杆组件（厚料） | Thread take-up lever asm.(H) | | 1 |
| 8 | 10124001 | 挑线杆滚针轴承 | Needle bearing | 2 | 2 |
| 9 | 11310012 | 挑线曲柄分部件 | Thread take-up crank | 1 | |
| | 11310010 | 挑线曲柄分部件（H-M） | Thread take-up crank（H-M） | 1 | 1 |
| | 1011000400 | 挑线曲柄分部件（厚料） | Thread take-up crank(H) | | 1 |
| 10 | 10105002 | 针杆连杆 | Needle bar connecting rod | | 1 |
| 11 | 101S17001 | 挑线曲柄螺钉（左旋） | Screw | 1 | 1 |
| 12 | 101S15004 | 针杆曲柄紧固螺钉 SM9/32*x28 L=16 | Screw SM9/32*x28 L=16 | 1 | 1 |
| 13 | 101S11003 | 针杆曲柄定位螺钉 SM9/32*x28 L=16 | Screw SM9/32*x28 L=16 | 1 | 1 |
| 14 | 10404001 | 针杆曲柄 | Needle bar crank | 1 | |
| | 11404035 | 针杆曲柄（厚料） | Needle bar crank(H) | | 1 |
| 15 | 101S15002 | 送料轴挡圈螺钉 SM1/4*x40 L=6 | Screw SM1/4*x40 L=6 | 2 | 2 |
| 16 | 1010300400 | 上轴前轴套组件 | Main shaft bushing front | 1 | 1 |
| 17 | 101S15006 | 夹线器螺钉 SM15/64*x28 L=7 | Screw SM15/64*x28 L=7 | 1 | 1 |
| 18 | 12203002 | 主轴中轴套 | Main shaft bushing mid | 1 | 1 |
| 19 | 101S15007 | 压杆导架螺钉 SM1/4*x40 L=8 | Screw SM1/4*x40 L=8 | 2 | 2 |
| 20 | 10108001 | 上轴挡圈 | Main shaft thrust collar | 2 | 2 |
| 21 | H03002 | 挡圈20 | Snap ring 20 | 1 | 1 |
| 22 | 11310014 | 送料偏心轮 | Feed eccentric cam | 1 | |
| | 400811 | 送料偏心轮(H-M) | Feed eccentric cam (H-M) | 1 | 1 |
| | 400006 | 送料偏心轮(厚料) | Feed eccentric cam (H) | | 1 |
| 23 | 10112017 | 送料偏心轮盖板 | Cover plate | 1 | 2 |
| | 10812002 | 送料偏心轮盖板(H-M) | Cover plate(H-M) | 1 | 1 |
| 24 | 101S11013 | 送料偏心轮螺钉 SM1/4*x40 L=13 | Screw SM1/4*x40 L=13 | 2 | 2 |
| 25 | 113S11003 | 护针片螺钉 SM9/64*x40 L=5 | Screw SM9/64*x40 L=5 | 2 | 1 |
| 26 | 13803002 | 上轴后轴套 | The rear axle sleeve | 1 | 1 |
| 27 | 10122105 | 上轴后套挡油油封 | Oil seal | 1 | 1 |
| 28 | H03001 | GB/T894.1-1986挡圈15 | Snap ring 15 | 1 | 1 |
| 29 | 10202002 | 上轴 | Main shaft | 1 | 1 |
| 30 | 13811021 | 手轮贴条 | Handwheel lable | 1 | 2 |
| 31 | S10009 | 螺钉 | Screw | 2 | 1 |
| 32 | 13835030 | 手轮 | Handwheel | 1 | 1 |
| 33 | 95111049 | 电机罩壳组件 | Motor cover asm | 1 | 1 |
| 34 | 1383300500 | 电机光栅组件（配琦星） | Motor grating sensor asm(Q) | 1 | 1 |
| | 1383300400 | 电机光栅组件（赖克） | Motor grating sensor asm | 1 | 2 |
| 35 | GB/T77-2000 | 内六角平端紧定螺钉 M3×4 | Screw M3×4 | 2 | 2 |
| 36 | GB/T77-2000 | 内六角平端紧定螺钉 M6×6 | Screw M6×6 | 2 | 1 |
| 37 | 95300004 | 电机转子总成 | Motor rotor | 1 | 1 |
| 38 | 95300005 | 电机定子总成 | Motor stator | 1 | 4 |
| 39 | GB/T93-1987 | 弹垫5 | Washer 5 | 4 | 4 |
| 40 | GB/T70.1 -2000 | 内六角圆柱头螺钉 M5×50 | Screw M5×50 | 4 | 1 |
| 41 | GB/T78-2000 | 内六角锥端紧定螺钉 M6×8 | Screw M6×8 | 1 | 1 |
| 42 | GB/T78-2000 | 内六角锥端紧定螺钉 M3×4 | Screw M3×4 | 1 | 4 |
| 43 | GB/T9074.8 | 一十字槽小盘头螺钉组合件M4×30 | Screw | 4 | 1 |
| 44 | 10122012 | 上轴孔塞 | Rubber plug | 1 | 1 |
| 45 | 10208001 | 电机防尘套 | Motor dust cover | 1 | 1 |
| 46 | S10013 | 螺钉 | Screw M6×6 | 1 | 1 |
| 47 | S10013 | 螺钉 | Screw M6×6 | 1 | 1 |
| 48 | 14123001 | 防油罩油绵 | Oil cotton | 1 | 1 |
| 49 | 14112004 | 防油罩 | Oil shield | 1 | 1 |

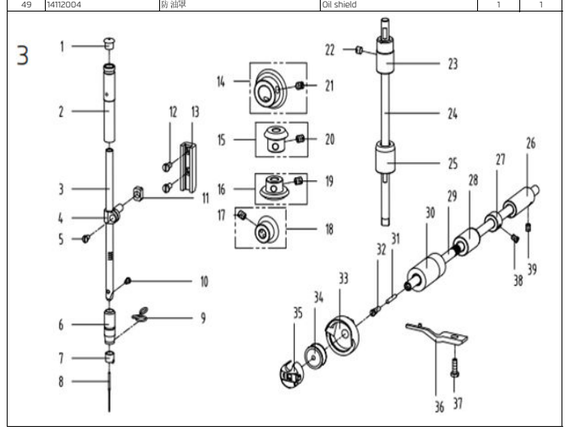

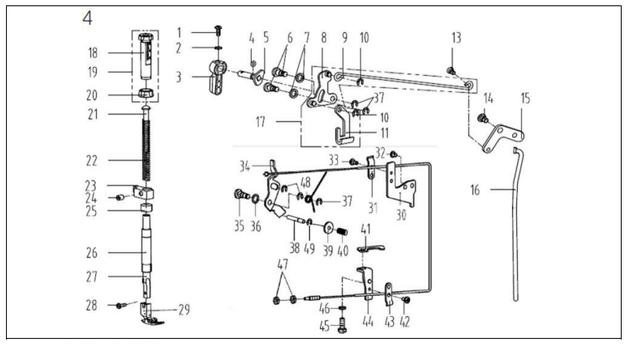

### 4. 压料、自动抬压脚分组件/Presser Bar ，Auto Lifter Components

| 序号NO. | 公司件号 Part NO. | 名称 PartName | 零件描述 Description | 数量 | Number |
|---|---|---|---|---|---|
| 1 | 101S11010 | 压脚扳手螺钉 SM9/64*x40 L=11 | Screw SM9/64*x40 L=11 | 1 | 1 |
| 2 | 10128002 | 压脚扳手螺钉垫圈 | Washer | 1 | 1 |
| 3 | 13811029 | 压脚扳手 | Hand lifter | 1 | 1 |
| 4 | O01004 | O型圈 | Rubber ring | 1 | 1 |
| 5 | 1011000200 | 压脚扳手凸轮分部件 | Hand lifter cam asm. | 1 | 1 |
| 6 | 101S20001 | 前杠杆螺纹销 | Screw | 2 | 2 |
| 7 | 10128015 | 螺纹销橡胶垫圈(厚) | Washer | 2 | 2 |
| 8 | 1011200100 | 抬压脚前杠杆分部件 | Lift front lever component | 1 | 1 |
| 9 | 10112013 | 抬压脚拉杆 | Knee lifter pull rod | 1 | 1 |
| 10 | H05003 | GB/T896-1986挡圈 5 | Snap ring | 2 | 2 |
| 11 | 10112010 | 压脚升降板 | Lifting plate | 1 | 1 |
| 13 | 101S20004 | 抬压脚拉杆螺钉 SM3/16*x32 | Hinge Screw SM3/16*x32 | 1 | 1 |
| 14 | 101S20003 | 后杠杆轴位螺钉 SM15/64*x28 | Hinge screw SM15/64*x28 | 1 | 1 |
| 15 | 10112014 | 抬压脚后杠杆 | Knee lifter back lever | 1 | 1 |
| 16 | 10112015 | 抬压脚顶杆 | Knee lifter connecting rod | 1 | 1 |
| 17 | 1011200100 | 抬压脚前杠杆组件 | Knee lifter lever asm | 1 | 1 |
| 18 | 13811027 | 调压螺钉 | Press regulating screw | 1 | 1 |
| 19 | 1381102700 | 调压螺钉组件 | Presser regulating screw nut asm. | 1 | 1 |
| 20 | 13811028 | 调压螺母 | Press regulating nut | 1 | 1 |
| 21 | 10102003 | 调压导杆 | Press regulating guide bar | 1 | 1 |
| 22 | 11427033 | 调压簧 | Press regulating spring | 1 | 1 |
| 23 | 13809030 | 压杆导架 | Presser bar guide bracket | 1 | 1 |
| 24 | 101S15007 | 压杆导架螺钉 SM1/4*x40 L=8 | Screw SM1/4*x40 L=8 | 1 | 1 |
| 25 | 10122112 | 压杆防油套 | Pressure bar oil cover | 1 | 1 |
| 26 | 10103012 | 压杆衬套 | Presser bar bushing,lower | 1 | 1 |
| 27 | 10102004 | 压杆 | Presser bar | 1 | 1 |
| 28 | 101S11009 | 活压脚螺钉 SM9/64*x40 L=10.5 | Screw SM9/64*x40 L=10.5 | 1 | 1 |
| 29 | 1131600600 | 压脚组件 | Presser foot asm | 1 | |
| | 1131600100 | 压脚组件（厚） | Presser foot asm(H) | | 1 |
| 30 | 11212009 | 松线导管上支架 | Wire release bracket upper | 1 | 1 |
| 31 | 11212008 | 松线导管压板 | Wire release press plate | 1 | 1 |
| 32 | 101S11004 | 螺钉 SM3/16*x28 L=7 | Screw SM3/16*x28 L=7 | 1 | 1 |
| 33 | 113S11004 | 松线导管压板螺钉M4x8 | Screw M4x8 | 1 | 1 |
| 34 | 1401206000 | 松线顶板组件 | Wire release plate asm | 1 | 1 |
| 35 | 101S20002 | 松线顶板螺纹销 | Wire release plate pin | 1 | 1 |
| 36 | 10128015 | 螺纹销橡胶垫圈(厚) | Washer | 1 | 1 |
| 37 | 11329020 | 挡圈5 | Snap ring | 5 | 5 |
| 38 | 10126003 | 松线轴钉 | Thread release supporting pin | 1 | 1 |
| 39 | 10128001 | 松线轴钉垫片 | washer | 1 | 1 |
| 40 | 10127003 | 松线轴钉弹簧 | Spring | 1 | 1 |
| 41 | 10112022 | 旋梭供油管压板 | Tube press plate | 1 | 1 |
| 42 | 113S11004 | 松线导管压板螺钉M4x8 | Screw M4x8 | 1 | 1 |
| 43 | 11212008 | 松线导管压板 | Wire presser A | 1 | 1 |
| 44 | 11312001 | 松线导管 下支架 | Wire release bracket lower | 1 | 1 |
| 45 | 116S30003 | 抬牙叉固定螺钉 SM15/64*x28 L=14.5 | Screw SM15/64*x28 L=14.5 | 1 | 1 |
| 46 | W02004 | 弹性垫圈 | Spring washer | 1 | 1 |
| 47 | 113S12001 | 螺母 SM3/16*x32 | Nut SM3/16*x32 | 2 | 2 |
| 48 | 11427009 | 松线压板复位簧 | Reset spring | 1 | 1 |
| 49 | H05012 | 松线轴钉挡圈 | Snap ring | 1 | 1 |

### 3. 针杆、竖轴、下轴部件/Needle bar,Upright Shaft & Hook Driving Shaft Components

| 序号NO. | 公司件号 Part NO. | 名称 PartName | 零件描述 Description | 数量 | Number |
|---|---|---|---|---|---|
| 1 | 10122013 | 针杆上衬套孔塞 | Rubber plug | 1 | 1 |
| 2 | 10103009 | 针杆上衬套 | Needle bar bushing upper | 1 | 1 |
| 3 | 10102002 | 针杆 | Needle bar | 1 | |
| | 10102021 | 针杆（厚料） | Needle bar (H) | | 1 |
| 4 | 10138002 | 针杆连接柱 | Needle bar connecting rod | 1 | 1 |
| 5 | 101S11005 | 螺钉 SM9/64*x40 L=6 | Screw SM9/64*x40 L=6 | 1 | 1 |
| 6 | 10103010 | 针杆下衬套 | Needle bar bushing lower | 1 | |
| | 11303023 | 针杆下衬套(厚料） | Needle bar bushing lower(H) | | 1 |
| 7 | 10113002 | 针杆线勾 | Needle bar thread guide | 1 | |
| | 11412063 | 针杆线勾（厚料） | Needle bar thread guide(H) | | 1 |
| 8 | 10117001 | 机针DB×1#14（薄料） | Needle | 1 | |
| | 10117002 | 机针DP×5#21（厚料） | Needle（H） | | 1 |
| 9 | 10413001 | 针杆下衬套线勾 | Lower bushing thread guide | 1 | |
| | 10113009 | 针杆下轴套线钩（厚料） | Lower bushing thread guide(H) | | 1 |
| 10 | 104S11006 | 支针螺钉(进口) SM1/8*x44 L=4.5 | Screw SM1/8*x44 L=4.5 | 1 | 1 |
| 11 | 10109001 | 针杆连接柱滑块 | Slide block | 1 | 1 |
| 12 | 101S11008 | 滑块 导轨螺钉 SM11/64*x40 L=8 | Screw SM11/64*x40 L=8 | 2 | 2 |
| 13 | 10109002 | 针杆拨头滑块 导轨 | Needle bar guide | 1 | 1 |
| 14 | 10425004 | 上轴伞齿轮 | Upper shaft bevel gear | 1 | 1 |
| 15 | 10425003 | 竖轴上伞齿轮 | Upper small bevel gear asm | 1 | 1 |
| 16 | 10425002 | 竖轴 下伞齿轮 | lower large bevel gear asm | 1 | 1 |
| 17 | 101S15007 | 齿轮螺钉 SM1/4*x40 L=7 | Screw SM1/4*x40 L=7 | 2 | 2 |
| 18 | 10425001 | 下轴伞齿轮 | Hook drive shaft bevel gear | 1 | 1 |
| 19 | 101S15007 | 齿轮螺钉 SM1/4*x40 L=7 | Screw SM1/4*x40 L=7 | 2 | 2 |
| 20 | 101S15007 | 齿轮螺钉 SM1/4*x40 L=7 | Screw SM1/4*x40 L=7 | 2 | 2 |
| 21 | 101S15007 | 齿轮螺钉 SM1/4*x40 L=7 | Screw SM1/4*x40 L=7 | 2 | 2 |
| 22 | 101S15006 | 一字开槽紧定螺钉SM15/64*x28 L=4.7 | Screw SM15/64*x28 L=4.7 | 1 | 1 |
| 23 | 10403014 | 竖轴上轴套 | Upright shaft bushing upper | 1 | 1 |
| 24 | 10102007 | 竖轴 | Upright shaft | 1 | 1 |
| 25 | 10403013 | 竖轴 下轴套 | Upright shaft bushing lower | 1 | 1 |
| 26 | 10403012 | 下轴后轴套 | Hook driving shaft bushing back | 1 | 1 |
| 27 | 10108002 | 下轴挡圈 | Hook driving shaft snap ring | 1 | 1 |
| 28 | 11303021 | 下轴中套 | Lower shaft middle bushing | 1 | 1 |
| 29 | 11304003 | 下轴 | Hook driving shaft | 1 | 1 |
| 30 | 11303001 | 下轴 前轴套 | Hook driving shaft bushing front | 1 | 1 |
| 31 | 10123009 | 下轴黑油芯 | Oil wick | 1 | 1 |
| 32 | 101S30005 | 下轴黑油螺钉 | set screw | 1 | 1 |
| 33 | 11418003 | 广濑牌厚料旋梭(扩大缝纫范围) | Hook asm（Hirose） | 1 | |
| | 11418007 | 精品旋梭(国产) | Hook asm（China） | 1 | |
| | 11418002 | 德盛有尾巴厚料旋梭(方筛底) | Hook asm（China Desheng）(H) | | 1 |
| | 11418004 | 广濑厚料旋梭(新)(有尾巴) | Hook asm（Hirose）(H) | | 1 |
| 34 | 10118003 | 梭心 | Bobbin | 1 | 1 |
| 35 | 11218504 | 梭壳 | Bobbin case asm. | 1 | 1 |
| 36 | 10112016 | 旋梭 定位钩 | Finger postioner | 1 | |
| | 10112032 | 旋梭 定位勾（厚料） | Finger postioner(H) | | 1 |
| 37 | 101S11011 | 旋梭定位钩螺钉 SM11/64*x40 L=13 | Screw SM11/64*x40 L=13 | 1 | 1 |
| 38 | 101S11012 | 下轴挡圈螺钉 SM11/64*x40 L=4.8 | Screw SM11/64*x40 L=4.8 | 2 | 2 |
| 39 | 113S14020 | 下轴后套螺钉 SM11/64*x40 L=7 | Screw SM11/64*x40 L=7 | 1 | 1 |

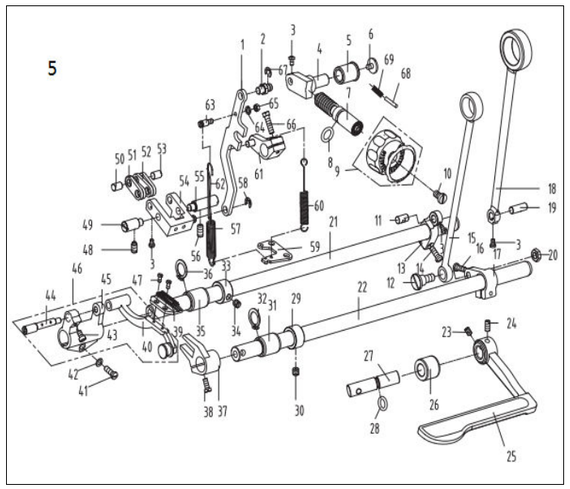

### 5. 送料分组件/Feed Mechanism Components

| 序号NO. | 公司件号 Part NO. | 名称 PartName | 零件描述 Description | 数量 | Number |
|---|---|---|---|---|---|
| 1 | 10105007 | 倒送料连杆 | Reverse feed connecting rod | 1 | 1 |
| 2 | 11426021 | 倒送料连杆销 | Connecting rod pin | 1 | 1 |
| | 11326011 | 倒送料连杆销（-7） | Connecting rod pin(-7) | 1 | 1 |
| 3 | 101S11005 | 螺钉 SM9/64*x40 L=6 | Screw SM9/64*x40 L=6 | 6 | 6 |
| 4 | 11401015 | 送料调节器 | Feed regulator | 1 | 1 |
| 5 | 10403017 | 送料调节器轴套 | Feed regulator bushing | 1 | 1 |
| 6 | 101S11023 | 送料调节器轴端螺钉 SM3/16*x28 L=6.5 | Screw SM3/16*x28 L=6.5 | 1 | 1 |
| 7 | 10126045 | 标盘螺柱 | Feed regulator stud | 1 | 1 |
| 8 | 10122016 | 送料调节螺钉O形圈 | Rubber ring | 1 | 1 |
| 9 | 1011107000 | 标盘旋钮组件 | Knob component | 1 | 1 |
| | 101110700 | 标盘旋钮组件（-7） | Knob component(-7) | 1 | 1 |
| 10 | 101S11022 | 送料控制螺钉 SM3/16*x28 L=18 | Screw SM3/16*x28 L=18 | 1 | 1 |
| 11 | 10126011 | 送料曲柄销 | Feed rocker crank pin | 1 | 1 |
| 12 | 101S20005 | 抬牙连杆轴位螺钉 SM9/32*x28 | hinge Screw SM9/32*x28 | 1 | 1 |
| 13 | 10104002 | 送料曲柄 | Feed rocker shaft crank | 1 | 1 |
| | 11304010 | 送料曲柄（-7） | Feed rocker shaft crank(-7) | 1 | 1 |
| 14 | 101S11016 | 送料曲柄螺钉 SM3/16*x28 L=14 | Screw SM3/16*x28 L=14 | 1 | 1 |
| 15 | 400093 | 抬牙连杆 | Connecting rod | 1 | 1 |
| 16 | 101S11016 | 送料曲柄螺钉 SM3/16*x28 L=14 | Screw SM3/16*x28 L=14 | 1 | 1 |
| 17 | 10104004 | 抬牙后曲柄 | Feed driving shaft crank | 1 | 1 |
| 18 | 400091 | 送料连杆 | Rocker shaft connecting rod | 1 | 1 |
| | 13805002 | 送料连杆(H-M) | Rocker shaft connecting rod(H-M) | 1 | 1 |
| | 400083 | 送料连杆（-7） | Rocker shaft connecting rod(-7) | 1 | 1 |
| 19 | 10126006 | 送料连杆销 | Connecting rod pin | 1 | 1 |
| | 11326011 | 送料连杆销（-7） | Connecting rod pin(-7) | 1 | 1 |
| 20 | 101S16003 | 抬牙连杆轴位螺母 SM9/32*x28 | Hinge Screw SM9/32*x28 | 1 | 1 |
| 21 | 10102008 | 送料轴 | Feed rocker shaft | 1 | 1 |
| 22 | 11202001 | 抬牙轴 | Feed driving shaft | 1 | 1 |
| 23 | 101S15006 | 夹线器螺钉 | Screw | 1 | 1 |
| 24 | 101S15013 | 螺钉SM15/64*x28 L=10 | ScrewSM15/64*x28 L=10 | 1 | 1 |
| 25 | 302933 | 倒缝扳手（喷漆） | Reverse feed lever asm | 1 | 1 |
| 26 | 10103024 | 倒送料轴轴套 | Reverse feed shaft bushing back | 1 | 1 |
| 27 | 10102023 | 倒缝送料轴 | Reverse feed shaft | 1 | 1 |
| 28 | 10122017 | 倒送料轴O形圈 | Rubber ring | 1 | 1 |
| 29 | 10108003 | 送料轴挡圈 | Feed rocker shaft snap ring | 2 | 2 |
| 30 | 101S15002 | 送料轴挡圈螺钉 SM1/4*x40 L=6 | Screw SM1/4*x40 L=6 | 4 | 4 |
| 31 | 10403015 | 轴套 | Bushing | 2 | 2 |
| 32 | H03001 | GB/T894.1-1986挡圈 15 | Snap ring 15 | 2 | 2 |
| 33 | 10108003 | 送料轴挡圈 | Feed rocker shaft snap ring | 1 | 1 |
| 34 | 101S15002 | 送料轴挡圈螺钉 SM1/4*x40 L=6 | Screw SM1/4*x40 L=6 | 2 | 2 |
| 35 | 10403015 | 轴套 | Bushing | 2 | 2 |
| 36 | H03001 | GB/T894.1-1986挡圈 15 | Snap ring 15 | 2 | 2 |
| 37 | 10104007 | 抬牙叉形 曲柄 | Driving shaft crank | 1 | 1 |
| 38 | 116S11005 | 抬牙叉形 曲柄螺钉 SM11/64*x40 L=13 | Screw SM11/64*x40 L=13 | 1 | 1 |
| 39 | 11414002 | 送料牙 | Feed dog | 1 | |
| | 11314001 | 送料牙(厚料) | Feed dog(H) | | 1 |
| 40 | 10107001 | 牙架 | Feed bar asm. | 1 | 1 |
| 41 | 101S11016 | 送料 曲柄螺钉 SM3/16*x28 L=14 | Screw SM3/16*x28 L=14 | 1 | 1 |
| 42 | 10128003 | 牙架座螺钉垫圈 | Washer | 1 | 1 |
| 43 | 101S11025 | 复位板螺钉 SM11/64*x40 L=7 | Screw SM11/64*x40 L=7 | 1 | 1 |
| 44 | 10126013 | 牙架销 | Feed bar pin | 1 | 1 |
| 45 | 10101003 | 牙架座 | Feed bar bed. | 1 | 1 |
| 46 | 400689 | 牙架组件(成品) | Feed bar sam. | 1 | 1 |
| 47 | 101S11018 | 送料牙螺钉 SM1/8*x44 L=6 | Screw SM1/8*x44 L=6 | 2 | 2 |
| 48 | 113S14010 | 左销螺钉 SM15/64*x28 L=10.5 | Screw SM15/64*x28 L=10.5 | 1 | 1 |
| 49 | 10126009 | 送料摆动板座左销 | Left pin | 1 | 1 |
| 50 | 10126007 | 短摆动板连杆销 | Connecting pin | 1 | 1 |
| 51 | 10109005 | 送料短摆动板 | Feed short shaking plate | 2 | 2 |
| | 13505024 | 送料短摆动板(H-M) | Feed short shaking plate(H-M) | 2 | |
| 52 | 10109004 | 送料长摆动板 | Feed long shaking plate | 2 | 2 |
| 53 | 10126007 | 短摆动板连杆销 | Connecting pin | 1 | 1 |
| 54 | 1010100200 | 送料摆动板座分部件 | Feed shaking plate bed | 1 | 1 |
| 55 | 10126010 | 送料摆动板座右销 | Component right pin | 1 | 1 |
| 56 | 101S15010 | 左销螺钉 SM15/64*x28 L=10.5 | Screw SM15/64*x28 L=10.5 | 1 | 1 |
| 57 | 11427011 | 送料调节弹簧 | Spring | 1 | 1 |
| 58 | H05003 | 开口挡圈5 | Snap ring 5 | 1 | 1 |
| 59 | 13812081 | 拉簧固定板 | Pull spring fixing plate | 1 | 1 |
| 60 | 10127011 | 倒送料拉簧 | Reverse feed pull spring | 1 | 1 |
| 61 | 1140402700 | 倒送料 曲柄组件 | Feed reverse crank asm. | 1 | 1 |
| | 1130402800 | 倒送料 曲柄组件（-7） | Feed reverse crank asm.(-7) | 1 | 1 |
| 62 | 11321005 | 油管 | Tube | 1 | 1 |
| 63 | 114S30007 | 弹簧悬置螺钉 | Screw | 1 | 1 |
| 64 | W02015 | GB/T93-1987 弹簧垫圈M4 | Spring washer M4 | 1 | 1 |
| 65 | 114S16004 | 螺母SM1/64*x40 | Nut SM11/64*x40 | 1 | 1 |
| 66 | S01102 | 螺钉 | Screw SM3/16*x28 L=18 | 1 | 1 |
| 67 | 11329020 | 挡圈5 | Snap ring 5 | 1 | 1 |
| 68 | 10126015 | 送料连杆销合销 | Pin | 1 | 1 |
| 69 | 10127010 | 送料连杆销合簧 | Spring | 1 | 1 |

6

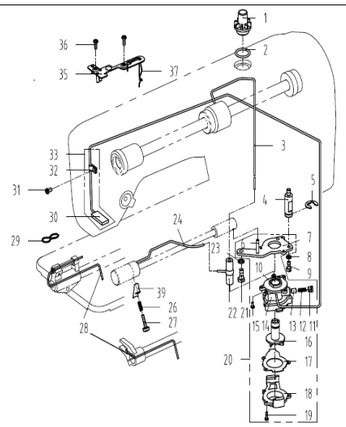

## 6. 润滑、油量检测组件/Oil Lublication、Oil Measuring Components

| 序号NO. | 公司件号 Part NO. | 名称 PartName | 零件描述 Description | 数量 | Number |
|---|---|---|---|---|---|
| 1 | 11211004 | 油窗 | Oil sight window | 1 | 1 |
| 2 | 10122019 | 油窗O形圈 | Rubber ring | 1 | 1 |
| 3 | 14121001 | 上轴供油管 | Main shaft oil tube | 1 | 1 |
| 4 | 112S30005 | 油泵连接螺柱 | Oil pump connecting stud | 1 | 1 |
| 5 | 11329010 | 开口挡圈10 | Snap ring 10 | 1 | 1 |
| 6 | 10121001 | 下轴供油管 | Hook driving shaft oil tube | 1 | 1 |
| 7 | 10112020 | 油泵安装板 | Oil pump installing base | 1 | 1 |
| 8 | W03002 | 弹垫 | Spring washer | 1 | 1 |
| 9 | 116S11005 | 沟牙天形盘柄螺钉SM11/64"x40 L=13 | Screw SM11/64"x40 L=13 | 1 | 1 |
| 10 | 10103022 | 油泵体衬套 | Oil pump bushing | 1 | 1 |
| 11 | 101S30007 | 柱塞螺钉 | Plunger Screw | 1 | 1 |
| 12 | 10127013 | 柱塞簧 | Plunger spring | 1 | 1 |
| 13 | 10122018 | 回油柱塞 | Plunger | 1 | 1 |
| 14 | 10120001 | 油泵体 | Oil pump | 1 | 1 |
| 15 | S04093 | 油泵螺钉 | Screw | 3 | 3 |
| 16 | 10111003 | 油泵叶轮 | Oil pump impeller | 1 | 1 |
| 17 | 10112021 | 油泵叶轮托板 | Oil pump impeller cover | 1 | 1 |
| 18 | 10111007 | 油泵盖 | Lubricating oil pump cover | 1 | 1 |
| 19 | 101S30006 | 螺钉 | Screw | 3 | 3 |
| 20 | 1012000100 | 油泵分部件 | Lubricating oil pump component | 1 | 1 |
| 21 | 101S11026 | 螺钉SM15/64"×28 L=9 | Screw SM15/64"×28 L=9 | 1 | 1 |
| 22 | 10136001 | 供油管接头 | Rubber joint | 1 | 1 |
| 23 | W02004 | GB/T93-1987弹垫M6 | Spring Washer M6 | 1 | 1 |
| 24 | 11321002 | 供油管 | Hook oil tube | 1 | 1 |
| 26 | 13827014 | 油量调节螺钉 弹簧 | Spring | 1 | 1 |
| 27 | 113S30001 | 油量调节螺钉 | Screw | 1 | 1 |
| 28 | 10423005 | 油线 | Oil wick | 1 | 1 |
| 29 | 10127015 | 回油毡夹 | Oil felt clamp | 1 | 1 |
| 30 | 10123006 | 回油毡 | Oil felt felt | 1 | 1 |
| 31 | 101S11004 | 挑线杆护罩螺钉SM3/16"x2.8 L=7 | Screw SM3/16"×28 L=7 | 1 | 1 |
| 32 | 10112053 | 回油管夹 | Oil tube clamp | 1 | 1 |
| 33 | 10121007 | 回油管部件 | Oil return tube component | 1 | 1 |
| 35 | 10112025 | 油线固定板 | Oil wick fixing plate | 1 | 1 |
| 36 | 101S11010 | 压脚扳手螺钉SM9/64"x40 L=11 | Screw SM9/64"×40 L=11 | 2 | 2 |
| 37 | 10123010 | 油线 | Oil wick | 1 | 1 |
| 38 | 10112053 | 油线夹 | Wick | 1 | 1 |
| 39 | 11312031 | 挡油罩 | Oil shield cover | 1 | 1 |

7

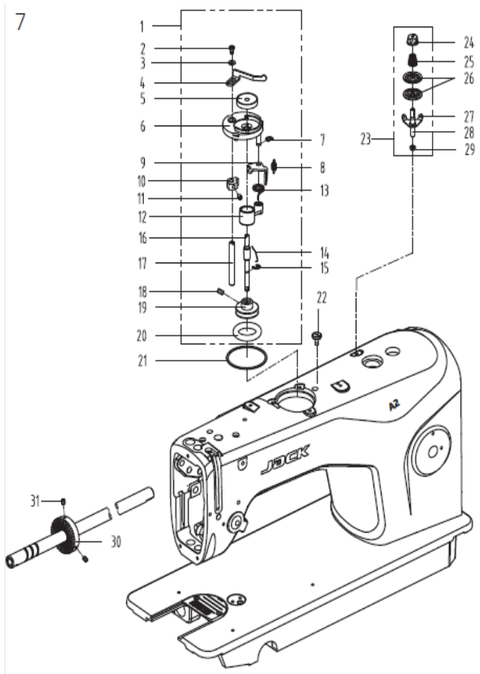

## 7. 绕线器组件/ Bobbin Components

| 序号NO. | 公司件号 Part NO. | 名称 PartName | 零件描述 Description | 数量 | Number |
|---|---|---|---|---|---|
| 1 | 1383103900 | 绕线器组件 | Bobbin winder asm. | 1 | 1 |
| 2 | 114S11008 | 螺钉M4x6 | Screw M4x6 | 1 | 1 |
| 3 | GB/T97.1 | 垫圈4 | Washer | 1 | 1 |
| 4 | 10113030 | 压线控制板 | Thread press control plate | 1 | 1 |
| 5 | 10111120 | 绕线衬垫 | Winding pad | 1 | 1 |
| 6 | 13831101 | 绕线器装置主座 | Bobbin winder bed | 1 | 1 |
| 7 | GB/T 896-1986 | 开口挡圈5 | Snap ring | 1 | 1 |
| 8 | 10127061 | 复位板拉簧 | Spring | 1 | 1 |
| 9 | 13812110 | 调节板 | Regulating plate | 1 | 1 |
| 10 | 10110030 | 绕线凸轮 | Bobbin winder cam | 1 | 1 |
| 11 | S09045 | 螺钉 | Screw | 1 | 1 |
| 12 | 1380510600 | 绕线器连杆组件 | Bobbin winder connecting rod | 1 | 1 |
| 13 | 13827103 | 调线复位簧 | spring | 1 | 1 |
| 14 | 10127060 | 弹簧 | Spring | 1 | 1 |
| 15 | GB/T 896-1986 | 开口挡圈4 | Snap ring | 1 | 1 |
| 16 | 13802111 | 绕线器主轴 | Bobbin winder mian shaft | 1 | 1 |
| 17 | 13802026 | 绕线凸轮轴 | Bobbin winder cam shaft | 1 | 1 |
| 18 | S09103 | 绕线轮 螺钉 | Screw | 2 | 2 |
| 19 | 13831102 | 绕线轮 | Bobbin winder wheel | 1 | 1 |
| 20 | D01110 | O型圈 | Ring | 1 | 1 |
| 21 | 11422062 | 密封垫 | Washer | 1 | 1 |
| 22 | 114S11003 | 螺钉SM3/16"x2.8 L=10 | Screw SM3/16"×28 L=10 | 3 | 3 |
| 23 | 1381300600 | 底线夹线器 | Bobbin thread tension asm. | 1 | 1 |
| 24 | 13811004 | 夹线螺母 | Thread tension nut | 1 | 1 |
| 25 | 11427006 | 小夹线弹簧 | Spring | 1 | 1 |
| 26 | 10112005 | 夹线板 | Thread tension disk | 2 | 2 |
| 27 | 11413022 | 夹线过线板 | Thread tension guide plate | 1 | 1 |
| 28 | 112S13004 | 夹线螺钉 | Screw | 1 | 1 |
| 29 | 114S16001 | 螺母SM11/64"x40 | Nut SM11/64"×40 | 1 | 1 |
| 30 | 11435013 | 绕线器驱动轮 | Driving wheel | 1 | 1 |
| 31 | S10009 | 螺钉M6×8 | Screw M6×8 | 2 | 2 |

8

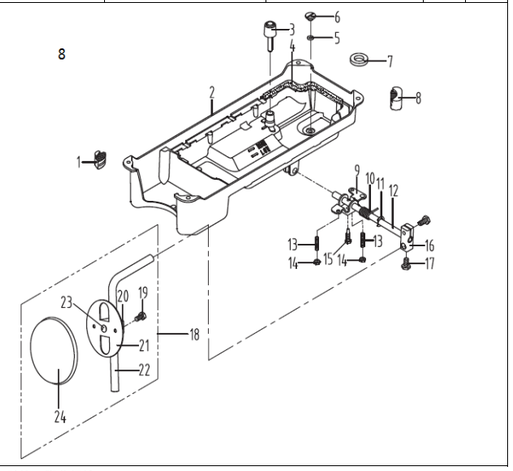

## 8. 油盘、膝抬压脚分组件/Oil Ceservoir，Knee Lifter Components

| 序号NO. | 公司件号 Part NO. | 名称 PartName | 零件描述 Description | 数量 | Number |
|---|---|---|---|---|---|
| 1 | 10122022 | 油盘座垫 | Oil reservoir rubber cushion | 2 | 2 |
| 2 | 10101006 | 油盘 | Oil Reservoir | 1 | 1 |
| 3 | 10111005 | 抬压脚顶杆 | Knee lifter push rod | 1 | 1 |
| 4 | 10122020 | 油盘垫 | Oil Reservoir gasket | 1 | 1 |
| 5 | 10122021 | O型圈 | Rubber ring | 2 | 2 |
| 6 | 101S11028 | 沫 油孔螺钉SM5/16"×24 L=7 | Screw SM5/16"×24 L=7 | 2 | 2 |
| 7 | 10131001 | 油盘磁铁 | Oil reservoir magnet | 1 | 1 |
| 8 | 10122023 | 油盘支架 | Oil reservoir rubber cushion | 2 | 2 |
| 9 | 10112027 | 抬压脚双向曲柄 | Knee lifter crank | 1 | 1 |
| 10 | 10127016 | 双向曲柄扭簧 | Knee lifter spring | 1 | 1 |
| 11 | H05010 | GB/T896-1986挡圈10 | Snap ring 10 | 1 | 1 |
| 12 | 10102011 | 抬压脚轴 | Knee lifter shaft | 1 | 1 |
| 13 | 101S15012 | 双向曲柄限位调节螺钉M6 L=30 | Screw M6 L=30 | 2 | 2 |
| 14 | 101S16004 | 双向曲柄限位调节螺母 M6 L=4 | Nut M6 L=4 | 2 | 2 |
| 15 | 101S12002 | 双向曲柄螺钉M6 L=26 | Screw M6 L=26 | 1 | 1 |
| 16 | 10101008 | 抬压脚操纵杆节头 | Bearing bracket | 1 | 1 |
| 17 | 101S12003 | 操纵杆节头螺钉M8 L=16 | Screw M8 L=16 | 2 | 2 |
| 18 | 10112028OO | 操纵杆组件 | Knee press plate asm | 1 | 1 |
| 19 | 101S12004 | 节头螺钉M6 L=11 | Screw M6 L=11 | 1 | 1 |
| 20 | 10112030 | 操纵杆节头 | Knee press plate holder | 1 | 1 |
| 21 | 10112029 | 操纵板 | Knee press plate | 1 | 1 |
| 22 | 10112028 | 操纵杆 | Knee lifter plate rod | 1 | 1 |
| 23 | 10122025 | 操纵杆垫 | Rubber | 1 | 1 |
| 24 | 10122024 | 操纵板软垫 | Knee press plate cover | 1 | 1 |

9

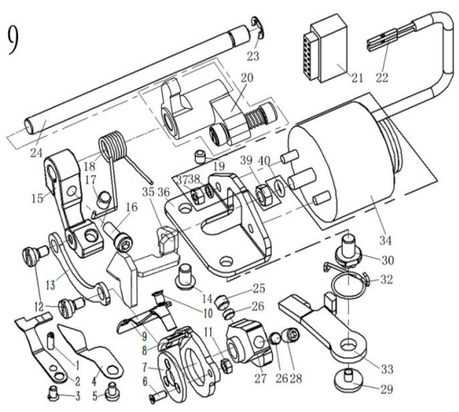

## 9. 切线装置部件/Thread Trimmer Components

| 序号NO. | 公司件号 Part NO. | 名称 PartName | 零件描述 Description | 数量 | Number |
|---|---|---|---|---|---|
| 1 | 113S15002 | 定刀调节螺钉SM1/8"x44 L=9.5 | Screw SM1/8"x44 L=9.5 | 1 | 1 |
| 2 | 11319001 | 定刀 | Secant knife | 1 | 1 |
| 3 | 113S17001 | 螺钉SM9/64"x40 | Screw SM9/64"x40 | 1 | 1 |
| 4 | 11312003 | 护针片 | Needle guard patch | 1 | 1 |
| 5 | 201S11009 | 螺钉SM9/64"x40 L=5.5 | Screw SM9/64"x40 L=5.5 | 1 | 1 |
| 6 | 138S17301 | 开槽沉头螺钉M3×8 | Screw M3×8 | 3 | 3 |
| 7 | 13812303 | 刀架压板 | Knife bracket press | 1 | 1 |
| 8 | 13807303 | 刀架 | Knife bracket | 1 | 1 |
| 9 | 11319002 | 活动刀(薄料长槽) | Motorial knife | 1 | 1 |
| | 11319003 | 活动刀（厚料长槽） | Motorial knife(H) | 1 | 1 |
| 10 | 113S17002 | 活动刀固定螺钉SM11/64"x40 L=4.4 | Screw SM11/64"x40 L=4.4 | 2 | 2 |
| 11 | 114S16004 | 螺母SM11/64"x40 | Nut SM11/64"x40 | 1 | 1 |
| 12 | 113S20001 | 连杆螺钉SM11/64"x40 | hinge Screw SM11/64"x40 | 2 | 2 |
| 13 | 13812302 | 连杆 | Connecting rod | 1 | 1 |
| 14 | 101S11026 | 油泵安装螺钉SM15/64"x28 L=9 | Screw SM15/64"x28 L=9 | 1 | 1 |
| 15 | 13804301 | 切线曲柄 | Thread Crank | 1 | 1 |
| 16 | S05004 | 螺钉M5×14 | Screw M5x14 | 1 | 1 |
| 17 | 11322001 | 驱动曲柄止动块 | Crank driver stopper block | 1 | 1 |
| 18 | 13827304 | 扭簧 | Spring | 1 | 1 |
| 19 | 207S14006 | 螺钉M5×5 | Screw M5×5 | 2 | 2 |
| 20 | 1380432300 | 剪线驱动曲柄 | Crank asm. | 1 | 1 |
| 21 | 11230004 | 34孔接线器 | Plug | 1 | 1 |
| 22 | 11230005 | 电线插针 | Pin | 1 | 1 |
| 23 | H05013 | GB/T896-1986挡圈 | Snap ring | 1 | 1 |
| 24 | 13802321 | 切线驱动轴 | Tangent drive shaft | 1 | 1 |
| 25 | 116S14003 | 针杆曲柄销定位螺钉SM1/4"x40 L=4.5 | Screw SM1/4"x40 L=4.5 | 1 | 1 |
| 26 | 11309030 | 凸轮顶柱 | Push rod | 2 | 2 |
| 27 | 13810306 | 凸轮 | Cam | 1 | 1 |
| | 13810307 | 凸轮（厚料） | Cam | 1 | 1 |
| 28 | 116S14005 | 螺钉SM1/4"x40 L=10 | Screw SM1/4"x40 L=10 | 1 | 1 |
| 29 | 138S01302 | 开槽圆柱头螺钉M4X5 | Screw M4×5 | 1 | 1 |
| 30 | 138S30301 | 松线座螺钉 | Screw | 1 | 1 |
| 32 | 13827303 | 松线扭簧 | Loose wire torsion spring | 1 | 1 |
| 33 | 13812304 | 松线板 | Thread release bed | 1 | 1 |
| 34 | 1023000100 | 剪线电磁铁组件 | Thread trimmer solenoid asm. | 1 | 1 |
| 35 | 13812370 | 推板 | Push plate | 1 | 1 |
| 36 | 11312006 | 切线磁铁支架 | Solenoid bracket | 1 | 1 |
| 37 | N01005 | 螺母 M4 | Nut M4 | 2 | 2 |
| 38 | W02018 | GB/T93-1987 弹簧垫圈4 | Washer | 2 | 2 |
| 39 | 112S16006 | 螺母 SM1/4"x40 | Nut SM1/4"X40 | 1 | 1 |
| 40 | D01004 | O型圈 | Rubber ring | 1 | 1 |

10 ( 1 )

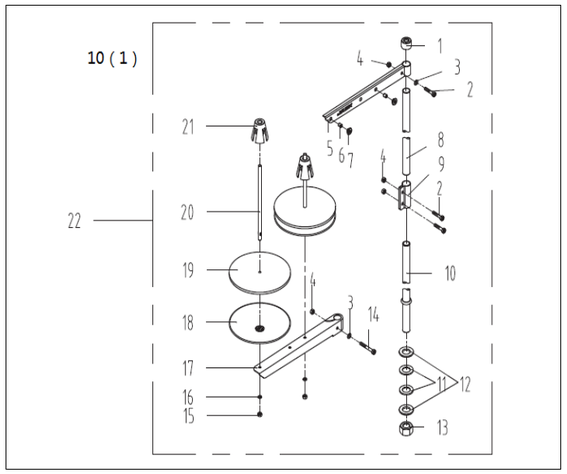

## 10. 机头附件(1)-线架组件/Machine Head Accessories(1)-Thread Stand Components

| 序号NO. | 公司件号 Part NO. | 名称 PartName | 零件描述 Description | 数量 | Number |
|---|---|---|---|---|---|
| 1 | 20131019 | 线架杆顶筒护橡皮 | Spool rest rod rubber cap | 1 | 1 |
| 2 | S04050 | 十字槽凹穴六角头螺栓 M5 L=16 | Screw M5 L=16 | 3 | 3 |
| 3 | W01047 | 垫圈M5 | Washer M5 | 2 | 2 |
| 4 | N01034 | 螺母 M5 | Nut M5 | 4 | 4 |
| 5 | 13831022 | 上线架过线杆 | Spool rest arm upper | 1 | 1 |
| 6 | 10113011 | 过线圈（内） | Thread guide ring | 2 | 2 |
| 7 | 10113010 | 过线圈(外) | Thread guide ring | 2 | 2 |
| 8 | 13831019 | 线架杆上节 | Spool rest rod upper | 1 | 1 |
| 9 | 13831021 | 线架杆接头 | Spool rest rod joint | 1 | 1 |
| 10 | 13831020 | 线架杆下节 | Spool rest rod lower | 1 | 1 |
| 11 | 10122106 | 橡胶垫圈 | Spool rest rod rubber ring | 2 | 2 |
| 12 | W01048 | 垫圈M16 | Washer M16 | 2 | 2 |
| 13 | N02008 | 六角薄螺母 M16 | Spool rest rod nut M16 | 1 | 1 |
| 14 | S04051 | 十字槽凹穴六角头螺栓 M5 | Spool rest arm lower screw M5 | 1 | 1 |
| 15 | N01034 | 螺母 M5 | Nut M5 | 2 | 2 |
| 16 | W03002 | 弹簧垫圈 5 | Spring washer 5 | 2 | 2 |
| 17 | 13831023 | 下线架过线杆 | Spool rest arm lower | 1 | 1 |
| 18 | 13831024 | 线盘 | Spool rest | 2 | 2 |
| 19 | 20131010 | 线盘垫 | Spool rest cushion | 2 | 2 |
| 20 | 20131006 | 线盘钉 | Spool pin | 2 | 2 |
| 21 | 13831025 | 线团防松垫 | Spool retainer | 2 | 2 |
| 22 | 1383100300 | 线架组件 | Thread stand asm. | 1 | 1 |

10(2)

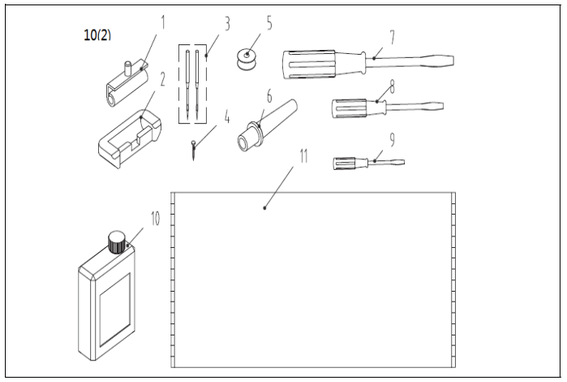

## 10. 机头附件(2)/Machine Head Accessories(2)

| 序号NO. | 公司件号 Part NO. | 名称 PartName | 零件描述 Description | 数量 | Number |
|---|---|---|---|---|---|
| 1 | 101120310O | 机头连接钩部件 | Hinge component | 2 | 2 |
| 2 | 101220600 | 机头连接钩座 | Head connecting rubber cushion | 2 | 2 |
| 3 | 10117012 | 机针DBx1#14（薄料） | Needle | 4 | |
| | 10117022 | 机针DPx5#21（厚料） | Needle (H) | | 4 |
| 4 | 101S30010 | 机头连接钩座钉 | Nail | 4 | 4 |
| 5 | 10118003 | 梭心 | Bobbin | 2 | 2 |
| 6 | 10111011 | 机头支柱 | Machine head rest pin | 1 | 1 |
| 7 | 20731047 | JK-798-2605螺丝刀 | Screw driver,large | 1 | 1 |
| 8 | 10131003 | 螺丝刀（中） | Screw driver,medium | 1 | 1 |
| 9 | 10131004 | 螺丝刀（小） | Screw driver,small | 1 | 1 |
| 10 | 1011101200 | 油箱部件 | Oiler component | 1 | 1 |
| 11 | 13831018 | 防尘罩 | Dust cover | 1 | 1 |


杰克缝纫机股份有限公司
杰克缝纫机
全球销量遥遥领先

公司地址(Address of Company)：
台州市椒江区机场南路15号
No.15 Rd Airport South，Jiaojiang District Taizhou City，Zhejiang，P.R.C
邮编(Zip Code)：318000
国内销售部(Domestic Trade Department)：
电话(TEL)：0086-0576-88177788 88177789
传真(FAX)：0086-0576-88177758
国际部(International Trade Department)：
电话(TEL)：0086-0576-88177782 88177774
传真(FAX)：0086-0576-88177787
服务热线：400-887 6858
http://www.chinajack.com


请您扫下杰克服务号

www.chinajack.com

2018.11


资料如有更改，恕不另行通知，以实物为准。
You will be not informed if the file has been revised.Please set sample as standard.